www.aver.com

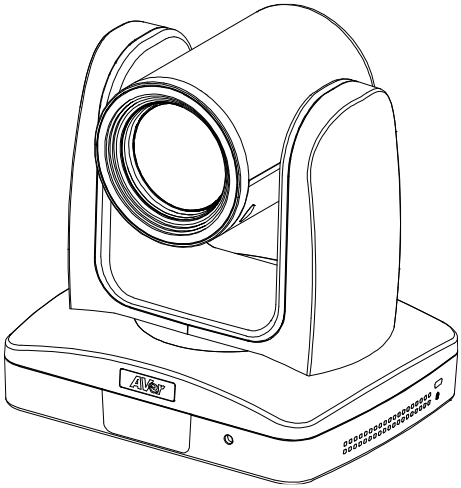

Professional PTZ Camera

TR310/TR311HN

TR311/TR313/TR333/TR331

Control Codes (Updated 3/10/2021)

V.2.0.4

Contents

Product Introduction 1

Overview 1

RS232 and RS422 Connection 2

OSD Tree 6

Camera 6

Advanced Setting 6

RS232 Command Table 7

Visca over IP Settings 8

Product Introduction

Overview

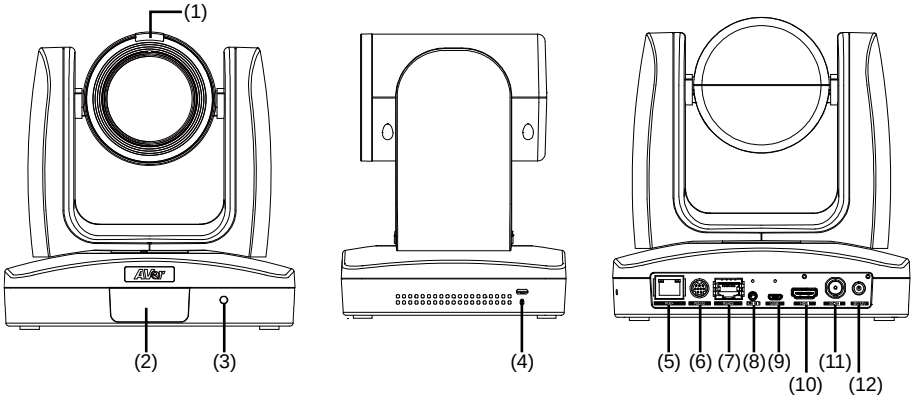

(1) Tally Lamp (*1)	(5) PoE+ IEEE 802.3AT	(9) USB 3.0 Port (Type C)
(2) IR Sensor	(6) RS232 Port	(10) HDMI Port
(3) Power Indicator	(7) RS422 Port	(11) 3G-SDI Port (*2)
(4) Kensington Lock	(8) Audio In	(12) DC Power Jack

*Line input level: 1Vrms (max.).

*Mic input level: 50mVrms (max.); Supplied voltage: 2.5V

*1: This feature (Tally) is not supported on TR310.

*2: This feature (3G-SDI) is not supported on TR310 & TR311HN.

RS232 and RS422 Connection

Connect through the RS232 or RS422 for camera control.

■ **RS232**

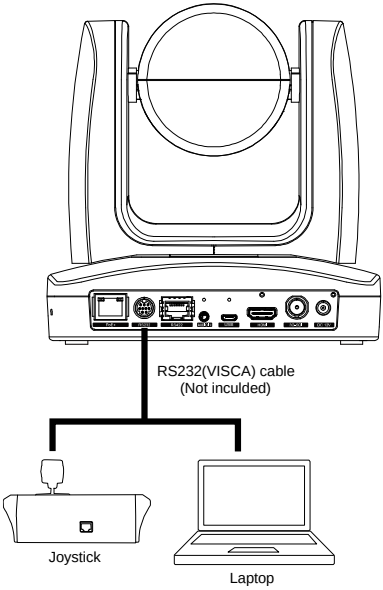

● **RS232 Port Pin Definition**

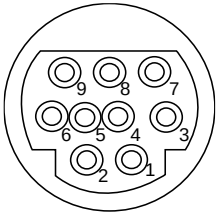

Function	Mini DIN9 PIN #	I/O Type	Signal	Description
VISCA IN	1	Output	DTR	Data Terminal Ready
	2	Input	DSR	Data Set Ready
	3	Output	TXD	Transmit Data
	6	Input	RXD	Receiver Data
VISCA OUT	7	Output	DTR	Data Terminal Ready
	4	Input	DSR	Data Set Ready
	8	Output	TXD	Transmit Data
	9	Input	RXD	Receiver Data
	5	---	---	Not connect

● **RS232 mini DIN9 to mini DIN8 Cable Pin Definition**

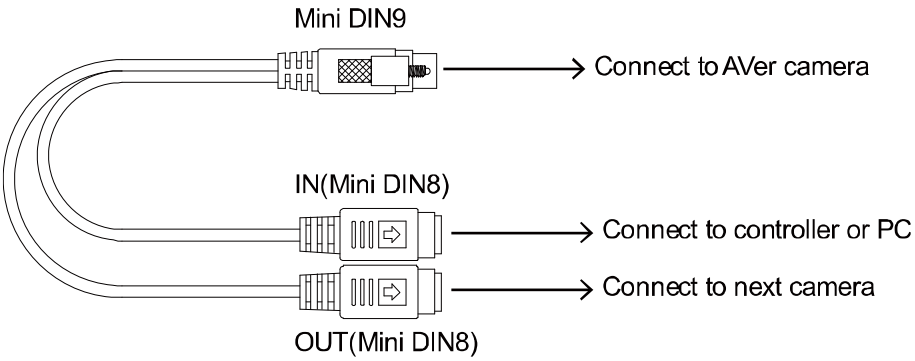

Mini DIN8 Cable Pin Definition

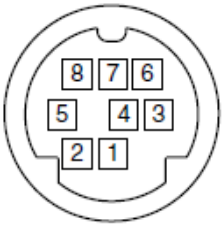

No.	Signal
1	DTR
2	DSR
3	TXD
4	GND
5	RXD
6	GND
7	NC
8	NC

● **Din8 to D-Sub9 Cable Pin Definition**

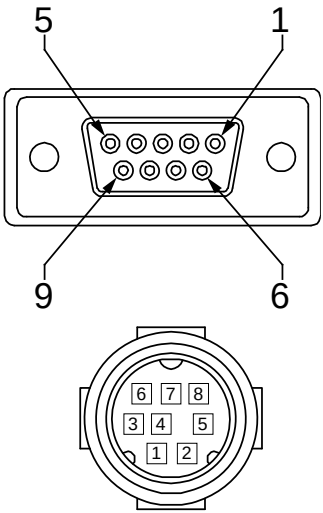

■ **RS422**

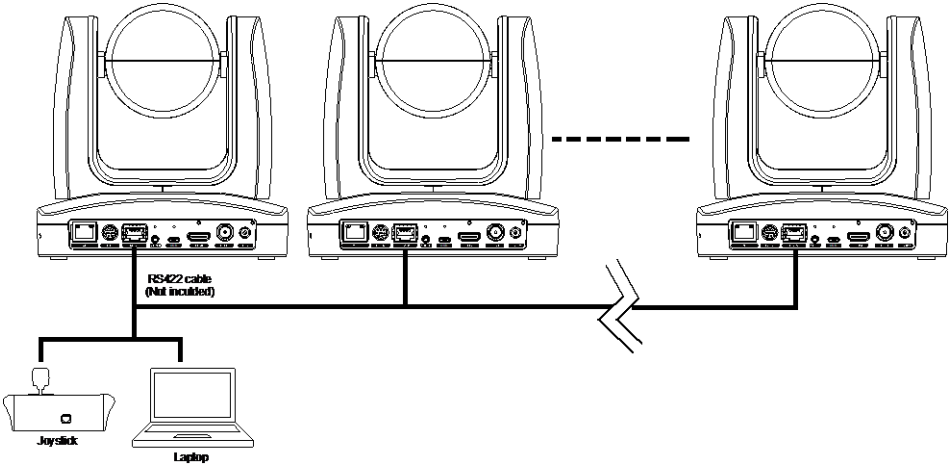

[Note] Use cat5e splitter for multi-camera connection.

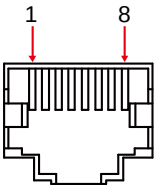

RS422 Pin			
No.	**Pin**	**No.**	**Pin**
1	TX-	5	TX+
2	TX+	6	RX+
3	RX-	7	RX-
4	TX-	8	RX+

Cat5e splitter pin assignment:

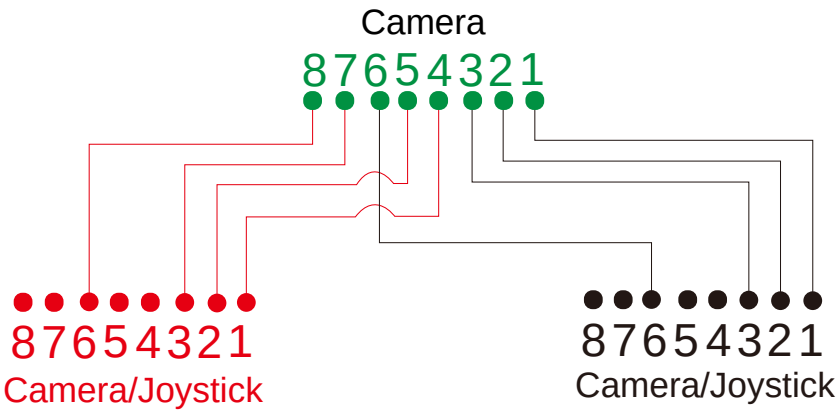

OSD Tree

Camera

Go to Advanced Setting -> Control. Make sure the Camera Address, Baud Rate setting is correct.

Advanced Setting

Advanced Setting	Audio	
	Input Type	Mic in/Line in
	Auto Gain Control	OFF/ON
	Noise Suppression	OFF/Low/Normal
	Audio Volume	0 ~ 10
	Control	
	Type	RS232/RS422
	Protocol	VISCA/Pelco-P/ Pelco-D
	Camera Address	1~7
	Baud Rate	2400/4800/9600/38400
	Tracking	ON/OFF

RS232 Command Table (Based on Camera FW .21 or above)

Command Set	Command	Command Packet	Comments
CAM_Power	On	8x 01 04 00 02 FF	Power ON/OFF
	Off	8x 01 04 00 03 FF	
CAM_Zoom	Stop	8x 01 04 07 00 FF	
	Tele(Variable)	8x 01 04 07 2p FF	p=0 (Low) to 7 (High)
	Wide(Variable)	8x 01 04 07 3p FF	
	Direct	8x 01 04 47 0p 0q 0r 0s FF	pqrs: Zoom Position · PTC310: 0x0000~0x6f20 PTC330: 0x0110~0x5490
CAM_Focus	Stop	8x 01 04 08 00 FF	
	Auto Focus	8x 01 04 38 02 FF	
	Manual Focus	8x 01 04 38 03 FF	
	One Push	8x 01 04 18 01 FF	
	Direct	8x 01 04 47 0p 0q 0r 0s FF	pqrs: Zoom Position
CAM_WB	Auto	8x 01 04 35 00 FF	Normal Auto
	ATW	8x 01 04 35 04 FF	
	Indoor	8x 01 04 35 01 FF	
	Outdoor	8x 01 04 35 02 FF	
	One Push WB	8x 01 04 35 03 FF	One Push WB mode
	Manual	8x 01 04 35 05 FF	Manual Control mode
	One Push	8x 01 04 10 05 FF	One Push WB Trigger
CAM_RGain	Up	8x 01 04 03 02 FF	Manual Control of R Gain
	Down	8x 01 04 03 03 FF	
CAM_Bgain	Up	8x 01 04 04 02 FF	Manual Control of B Gain
	Down	8x 01 04 04 03 FF	
CAM_AE	Full Auto	8x 01 04 39 00 FF	Automatic Exposure mode
	Manual	8x 01 04 39 03 FF	Manual Control mode
	Shutter Priority	8x 01 04 39 0A FF	Shutter Priority Automatic Exposure mode
	Iris Priority	8x 01 04 39 0B FF	Iris Priority Automatic Exposure mode
	Bright	8x 01 04 39 0D FF	Bright Mode (Manual control)
CAM_Shutter	Up	8x 01 04 0A 02 FF	Shutter Setting
	Down	8x 01 04 0A 03 FF	
CAM_Iris	Up	8x 01 04 0B 02 FF	Iris Setting
	Down	8x 01 04 0B 03 FF	
CAM_Gain	Up	8x 01 04 0C 02 FF	Gain Setting
	Down	8x 01 04 0C 03 FF	
CAM_Bright	Up	8x 01 04 0D 02 FF	Bright Setting
	Down	8x 01 04 0D 03 FF	

	Up	8x 01 04 0E 02 FF	Exposure Compensation Amount Setting
	Down	8x 01 04 0E 03 FF	
CAM_Backlight	On	8x 01 04 33 02 FF	Back Light Compensation ON/OFF
	Off	8x 01 04 33 03 FF	
CAM_Preset	Reset	8x 01 04 3F 00 pp FF	
	Set	8x 01 04 3F 01 pp FF	pp: Preset Number 0x00~0xFF
	Recall	8x 01 04 3F 02 pp FF	
CAM_Menu	On/Off	8x 01 06 06 10 FF	Display ON/OFF
Pan-tilt Drive	Up	8x 01 06 01 VV WW 03 01 FF	
	Down	8x 01 06 01 VV WW 03 02 FF	
	Left	8x 01 06 01 VV WW 01 03 FF	
	Right	8x 01 06 01 VV WW 02 03 FF	VV: Pan speed setting 0x01 (low speed) to 0x18 (high speed) WW: Tilt speed setting 0x01 (low speed) to 0x18 (high speed)
	UpLeft	8x 01 06 01 VV WW 01 01 FF	
	UpRight	8x 01 06 01 VV WW 02 01 FF	
	DownLeft	8x 01 06 01 VV WW 01 02 FF	
	DownRight	8x 01 06 01 VV WW 02 02 FF	
	Stop	8x 01 06 01 VV WW 03 03 FF	
	Home	8x 01 06 04 FF	
	Reset	8x 01 06 05 FF	
Absolute Position (v26 or above)		8x 01 06 02 VV WW 0Y 0Y 0Y 0Y 0Z 0Z 0Z 0Z FF	VV: Pan speed setting 0x01 (low speed) to 0x18 (high speed) WW: Tilt speed setting 0x01 (low speed) to 0x18 (high speed) YYYY: Pan Position 8A14 to 762C (CENTER 0000) ZZZZ: Tilt Position 468B to E898 (Image Flip: OFF) (CENTER 0000)
CAM_Wdr	On	8x 01 04 3D 02 FF	Wdr ON/OFF
	Off	8x 01 04 3D 03 FF	
CAM_MenuEnter		8x 01 7E 01 02 00 01 FF	Enter Submenu
Tally Lamp ON		8x 01 7E 01 0A 00 02 FF	
Tally Lamp OFF		8x 01 7E 01 0A 00 03 FF	
Freeze	Freeze On	81 01 04 62 02 FF	Freeze On Immediately
	Freeze Off	81 01 04 62 03 FF	Freeze Off Immediately
	Preset Freeze On	81 01 04 62 22 FF	Freeze On When Running Preset
	Preset Freeze Off	81 01 04 62 23 FF	Freeze Off When Running Preset
Auto Tracking	On	8x 01 04 7D 02 FF	Auto tracking ON/OFF
	Off	8x 01 04 7D 03 FF	

CAM_Memory Special	Set	8x 01 04 3F 01 pp FF	pp: 0x00 To 0xFF normal preset pp: 0x5F => Trun on OSD menu pp: 0xA0 => Full Body pp: 0xA1 => Upper Body pp: 0xA2 => Tracking Point pp: 0xA3 => Switch pp: 0xA4 => Presenter mode (support with v25 or newer firmware) pp: 0xA5 => Zone mode (support with v25 or newer firmware)

Inquiry Command	Command Packet	Reply Packet	Comments
CAM_PowerInq	8x 09 04 00 FF	y0 50 02 FF	On
		y0 50 03 FF	Off
CAM_WBModeInq	8x 09 04 35 FF	y0 50 00 FF	Auto
		y0 50 01 FF	In Door
		y0 50 02 FF	Out Door
		y0 50 03 FF	One Push WB
		y0 50 04 FF	ATW
		y0 50 05 FF	Manual
CAM_RGainInq	8x 09 04 43 FF	y0 50 00 00 0p 0q FF	pq: R Gain
CAM_BGainInq	8x 09 04 44 FF	y0 50 00 00 0p 0q FF	pq: B Gain
CAM_AEModeInq	8x 09 04 39 FF	y0 50 00 FF	Full Auto
		y0 50 03 FF	Manual
		y0 50 0A FF	Shutter Priority
		y0 50 0B FF	Iris Priority
		y0 50 0D FF	Bright
CAM_ShutterPosInq	8x 09 04 4A FF	y0 50 00 00 0p 0q FF	pq: Shutter Position
CAM_IrisPosInq	8x 09 04 4B FF	y0 50 00 00 0p 0q FF	pq: Iris Position
CAM_GainPosInq	8x 09 04 4C FF	y0 50 00 00 0p 0q FF	pq: Gain Position
CAM_BrightPosInq	8x 09 04 4D FF	y0 50 00 00 0p 0q FF	pq: Bright Position
CAM_ExpCompPosInq	8x 09 04 4E FF	y0 50 00 00 0p 0q FF	pq: ExpComp Position
CAM_FocusModeInq	8x 09 04 38 FF	y0 50 02 FF	Auto Focus
		y0 50 03 FF	Manual Focus
CAM_FocusPosInq	8x 09 04 48 FF	y0 50 0p 0q 0r 0s FF	pqrs: Focus Position
zoom_Pos_Inq	8x 09 04 47 FF	y0 50 0p 0q 0r 0s FF	pqrs: Zoom Position
PT_Pos_Inq	8x 09 06 12 FF	y0 50 0Y 0Y 0Y 0Y 0Z 0Z 0Z 0Z FF	YYYY: Pan Position 8A14 to 762C (CENTER 0000) ZZZZ: Tilt Position 468B to E898 (Image Flip: OFF) (CENTER 0000)

Visca over IP Settings

VISCA over IP

PORT

Internet protocol	IPv4
Transport protocol	UDP
Port address	52381

FORMAT

	byte 0	byte 1	byte 2	byte 3	byte 4	byte 5	byte 6	byte 7	byte8 ~~~ byte23
func	Payload type		Payload length		Sequence number				Payload (1 to 16 bytes)
data	Value1	Value2	1~16 (0x0001~0x0010)		0X00000000 ~ 0XFFFFFFFF				VISCA Packet (see page VISCA)

Payload type

Name	Value1	Value2	Description
VISCA command	0x01	0x00	Stores the VISCA command.
VISCA inquiry	0x01	0x10	Stores the VISCA inquiry.
VISCA reply	0x01	0x11	Stores the reply for the VISCA command or VISCA inquiry

Sequence number

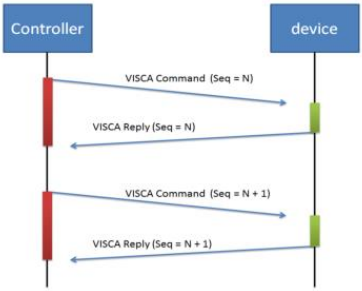

Sequence number = N